Orion® Tripod Mounting Bracket for iPad® and Tablets

#52096; #24439 with Tripod Adapter

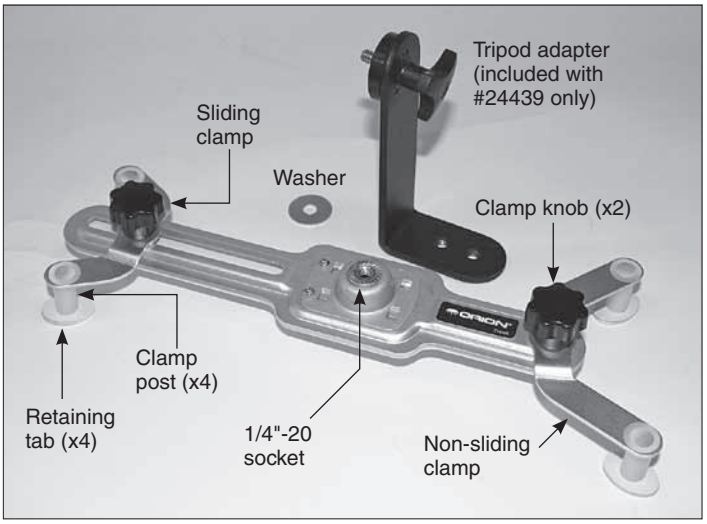

Figure 1. *Components and features of the Tripod Mounting Bracket*

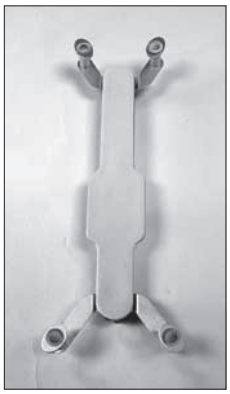

Figure 2. *Lay the bracket on a flat surface, with clamp posts and retaining tabs up.*

Figure 3. *(at right) The sliding clamp should grip the corner of the tablet diagonally opposite the non-sliding clamp.*

Congratulations on your purchase of the Orion Tripod Mounting Bracket for iPad and Tablets. This product will allow you to mount an iPad or almost any other tablet computer with a 7" to 10.1" display on a tripod, to aid in finding and identifying stars, constellations, planets, and other celestial objects in the night sky. Just fire up your favorite dynamic star chart app and use it as a visual guide to what's up in the heavens. With your tablet device mounted on a tripod, you will avoid the arm and shoulder fatigue you'd suffer by holding the tablet up to the sky by hand, allowing you to relax and just have fun stargazing to your heart's content!

Attaching Bracket to Your Tablet

The bracket fits tablet devices with 7" to 10.1" LCD *screen* sizes, measured diagonally, or a corner-to-diagonal-corner length of 9-1/2" to 12-1/4". This includes the Apple iPad 2, iPad, and many other brands of tablet device.

The bracket is designed to span two diagonally opposite corners of your tablet. Once installed properly, the flat retaining tabs on each of the four clamp posts will keep the tablet from falling out of the bracket no matter how the tablet is oriented on the tripod. To install your tablet in the bracket:

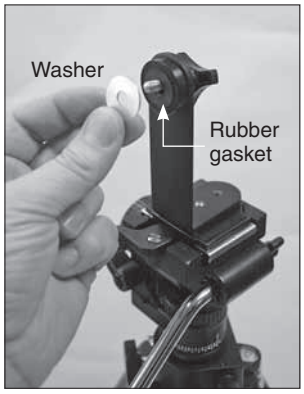

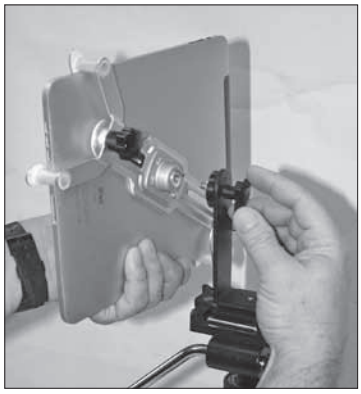

Figure 4. *Be sure to insert the included washer onto the tripod adapter bolt, to prevent damage to the adapter's rubber gasket.*

Figure 5. *(at right) Screw the ¼"-20 stud into the threaded socket of the tablet bracket and tighten securely.*

1. First loosen the two clamp knobs slightly so the clamps can move freely.
2. Move the sliding clamp to the outer end of its travel.
3. Now place the bracket on a flat surface so that the clamp posts face up (**Figure 2).**
4. Carefully lay the tablet (with its screen facing up) in the bracket so that one corner of the tablet is roughly centered between, and makes contact with, the two posts of the non-sliding clamp. Now grasp the sliding clamp and slide it inward until the posts contact and straddle the opposite corner of the tablet **(Figure 3)**.
5. When both clamps are straddling the two opposite corners of the tablet, and all four posts are touching the tablet, reach under the tablet and tighten both clamp knobs.
6. The bracket should now be securely attached to the tablet. Check again to make sure that all four posts are in contact with the tablet and that all four retaining tabs overlap the edges of the tablet. This will ensure that the tablet can not fall out at any angle.

Figure 6. *An iPad is shown mounted on an Orion Paragon HD-F2 tripod via the tripod mounting bracket and tripod adapter.*

You're now ready to mount the bracket holding your tablet device onto the tripod adapter.

Mounting Tablet on Tripod

1. Firmly attach the tripod adapter (L-bracket or similar) to the tripod.
2. Make sure the altitude axis of the tripod head is locked, to prevent sudden downward rotation when the tablet device is mounted.
3. Place the washer on the threaded stud of tripod adapter **(Figure 4).** This washer is needed to prevent possible damage to the tripod adapter's rubber gasket (if it has one) by the tablet bracket.
4. Holding the tablet in one hand, use your other hand to thread the tripod adapter's ¼"-20 stud into the socket on the bracket **(Figure 5).** You may first have to adjust the position of the tripod pan handle so that it does not interfere with the tablet.
5. Tighten the knob on the tripod adapter. **Figure 6** shows a tablet correctly installed in the bracket.

Using Tablet Bracket for Stargazing

Using an iPad or other tablet computer device for stargazing can be a great aid in locating, identifying, and learning about stars, constellations, planets, and other celestial objects in the visible heavens. There are many astronomy apps on the market for both iOS (Apple) and Android-based tablets that can show you "what's up" in any portion of the sky you're facing, thanks to the devices' internal compass or gyroscope electronics. No longer do you need a printed star map by your side to find your way around the night sky. With your tablet mounted on a suitable tripod you can view a star chart that pans dynamically in sync with the tablet, identifying everything you are seeing in the sky. Orion's StarSeek apps (Standard, Pro, and Max) for iPhone, iPod Touch, and iPad are among the best and most powerful such apps on the market today. They are available for download exclusively on the iTunes App Store.

Figure 7. *With your tablet device mounted on a tripod or parallelogram binocular mount, just fire up the Orion StarSeek app (sold separately) or another dynamic star-chart app and you'll be all set for a fun, relaxing evening of naked-eye stargazing!*

While star chart apps are extremely helpful in locating and identifying celestial objects, they are limited by the accuracy of your device's digital compass or gyroscope. As you "zoom" in on your star chart app, the object in the sky may not line up exactly with its position on your device. That's just the nature of the tablet's digital compass – it's not pinpoint accurate!

With many tripods, the holder will allow the tablet to be oriented in either portrait (vertical) or landscape (horizontal) orientation, and it can easily be rotated from one orientation to the other by just loosening the knob on the tripod L-bracket by a quarter turn or so, then retightening it after you have changed orientations.

CAUTION: When observing with your tripod-mounted tablet device, be careful not to trip on the tripod legs! As you pan your device horizontally and walk around your tripod, be mindful of where the tripod legs are!

In choosing a tripod, be sure its head has the ability to rotate 90 degrees from the horizontal plane to vertical plane. That way, the tablet device will be able to point up to the zenith, the highest point overhead. Also look for a tripod whose head extends high enough to limit the amount of crouching down you have to do when you're looking at stars high overhead. Orion's Paragon HD-F2 tripod fits the bill nicely on both counts, with the head extending 72.5" high at full extension.

The ultimate mount for tablet-assisted stargazing is, we believe, the Orion Paragon-Plus Binocular Mount & Tripod. It's a parallelogram-style mount designed for binocular use but also ideal for naked-eye observing with a tablet device. It eliminates arm strain and shakiness, and allows you to aim your tablet anywhere in the sky, even to the zenith, while you stand or sit comfortably underneath. It positions the tablet at a height of less than 3 ft. to over 7-1/2 ft. above ground, and you can raise and lower the tablet while staying fixed on a portion of sky, a wonderful feature when two or more people of different heights are observing together.

Specifications

Tablet bracket (#52096)

Dimensions:	11-3/4"L x 4-1/4"W x 2"H
Weight:	4.8 oz.
Fits tablet sizes:	9-1/2" to 12-1/4" (diagonal corner-to-corner), 13/16" thick (LCD screen sizes 7" to 10.1")
Mounting socket:	¼"-20 thread
Material:	Aluminum; foam padding on contact surfaces

Tripod L-Adapter (included with #24439)

Dimensions:	4-1/4"H x 1-1/4"W x 2-5/8"D
Mounting stud:	¼"-20
Material:	Aluminum, anodized

iPad, iPhone, iPod, and iPod touch are trademarks of Apple Inc., registered in the U.S. and other countries. App Store is a service mark of Apple Inc.

One Year Limited Warranty

This Orion Tripod Mounting Bracket for iPad and Tablets is warranted against defects in materials or workmanship for a period of one year from the date of purchase. This warranty is for the benefit of the original retail purchaser only. During this warranty period Orion Telescopes & Binoculars will repair or replace, at Orion's option, any warranted product that proves to be defective, provided it is returned postage paid to: Orion Warranty Repair, 89 Hangar Way, Watsonville, CA 95076. If the product is not registered, proof of purchase (such as a copy of the original invoice) is required.

This warranty does not apply if, in Orion's judgment, the product has been abused, mishandled, or modified, nor does it apply to normal wear and tear. This warranty gives you specific legal rights, and you may also have other rights, which vary from state to state. For further warranty service information, contact: Customer Service Department, Orion Telescopes & Binoculars, 89 Hangar Way, Watsonville, CA 95076; (800)-676-1343.

ORION®
TELESCOPES & BINOCULARS
Providing Exceptional Consumer Optical Products Since 1975

OrionTelescopes.com
Customer Support (800) 676-1343
E-mail: support@telescope.com
Corporate Offices (831) 763-7000
89 Hangar Way, Watsonville, CA 95076

© 2012 Orion Telescopes & Binoculars